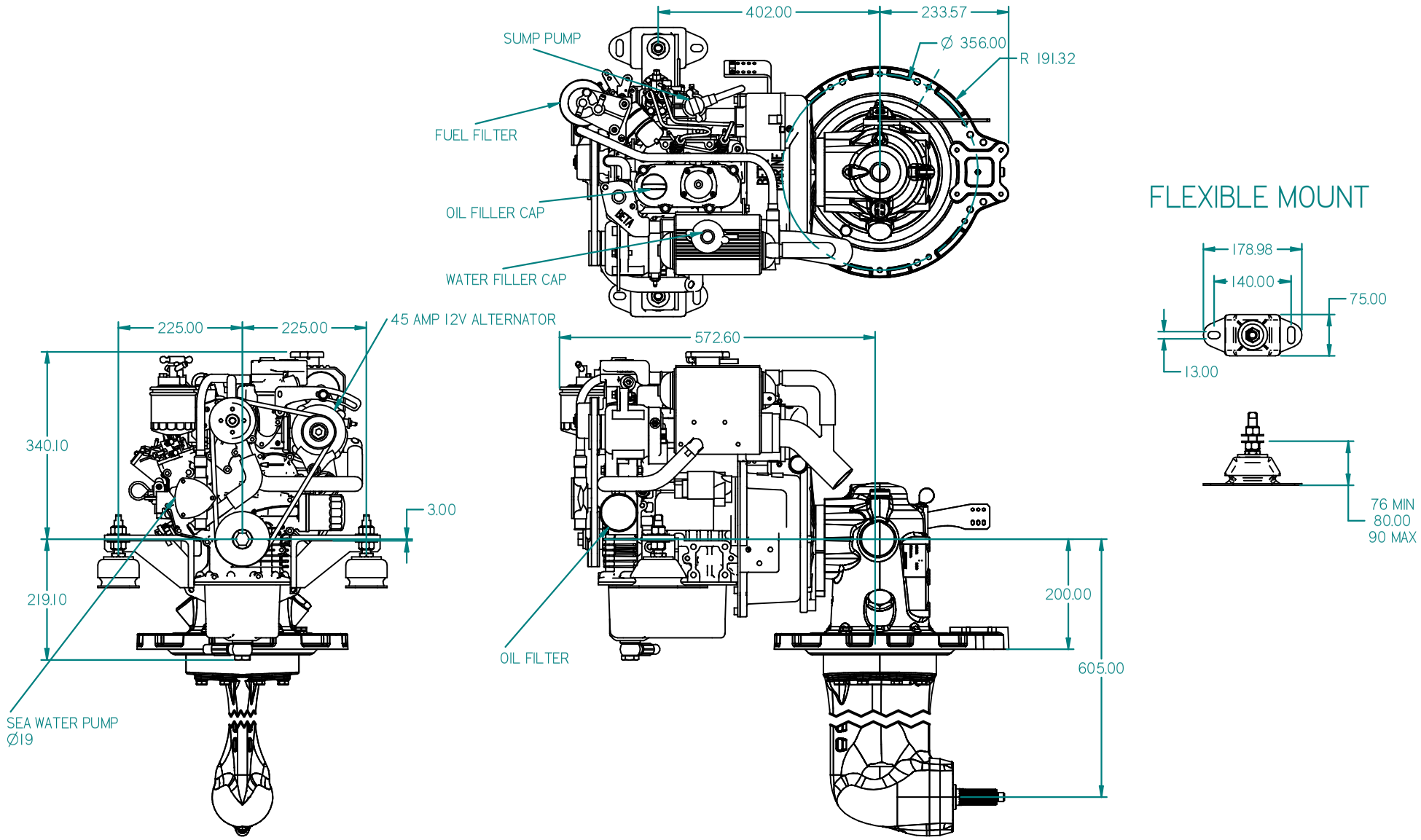

REV	DESCRIPTION	DATE	APP'D	DRAWN
01				

NOTES

TITLE:

BETA16 HEAT EXCHANGE
SEA PROP 60 SAILDRIVE

DIMENSIONS IN MM (INCH)
DO NOT SCALE

PART FILE NAME: BETA16 HE SEAPROP60.asm

BETA MARINE

TEL: (01452) 723492 FAX: (01452) 729916

BETA MARINE LTD,
DAVY WAY,
WATERWELLS,
QUEDGELEY,
GLOUCESTER. GL2 2AD, UK

DRAWN BY:	TW	SIZE	A4	DWG NO:	100-08975	REV	00
CHECKED BY:	LT	SCALE	NTS	PAGE	1 of 1	DATE	15/06/2010