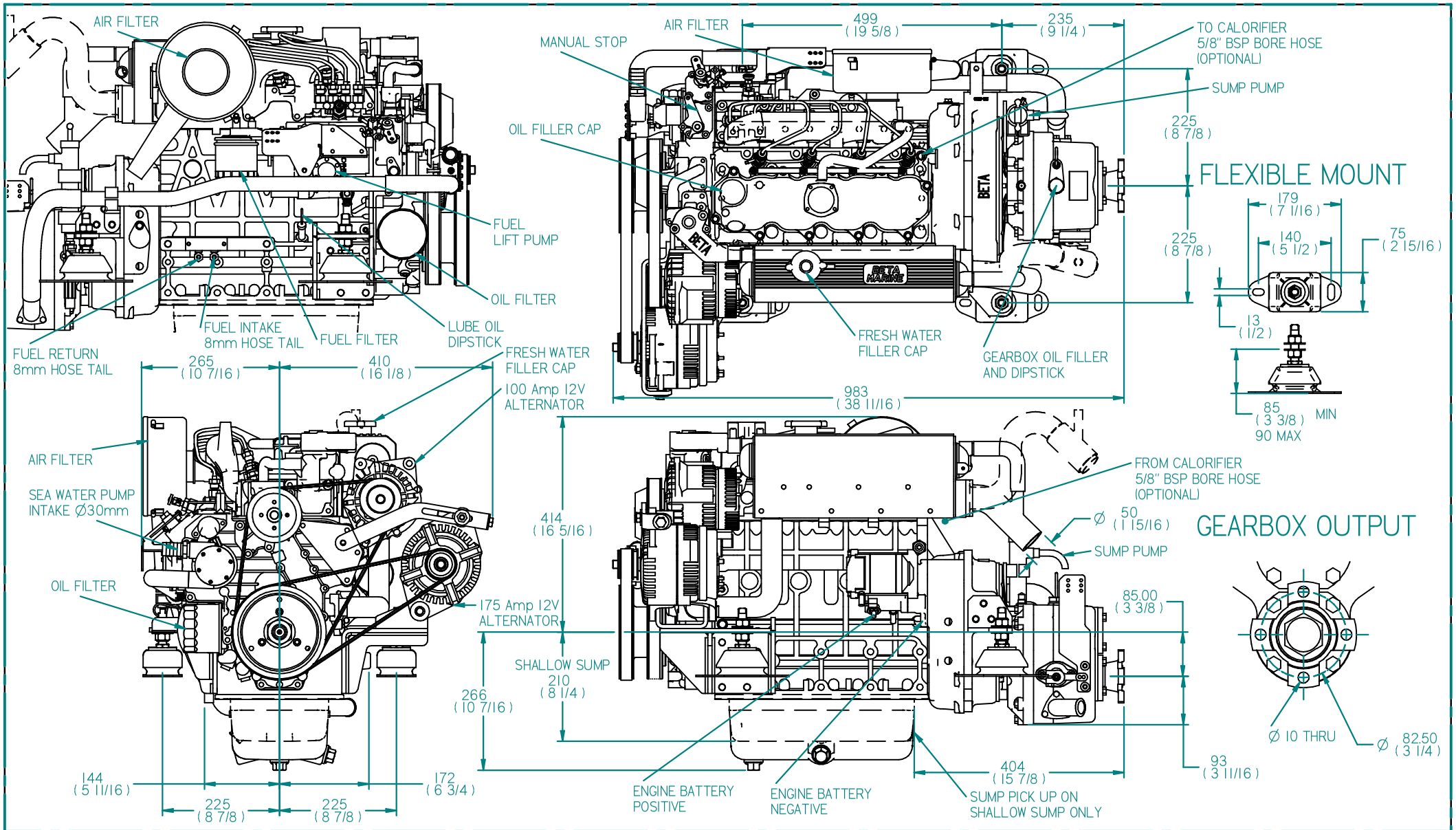

REV	DESCRIPTION	DATE	APP'D	DRAWN
01				

NOTES
100AMP 1ST ALT
175AMP 2ND ALT

TITLE:
BETA 43-50 HEAT EXCHANGE
TMC260 GEARBOX TWIN ALT

DIMENSIONS IN MM (INCH) DO NOT SCALE

PART FILE NAME: 100-09009 BETA50 HE TMC260 100AMP AND 175AMP ALT.asm

BETA MARINE
TEL: (01452) 723492 FAX: (01452) 729916
BETA MARINE LTD, DAVY WAY, WATERWELLS, QUEDGELEY, GLOUCESTER. GL2 2AD, UK

DRAWN BY:	SIZE	DWG NO:	REV
TW	A4	100-09009	00
CHECKED BY: LT	SCALE NTS	PAGE 1 of 1	DATE 20/08/2010