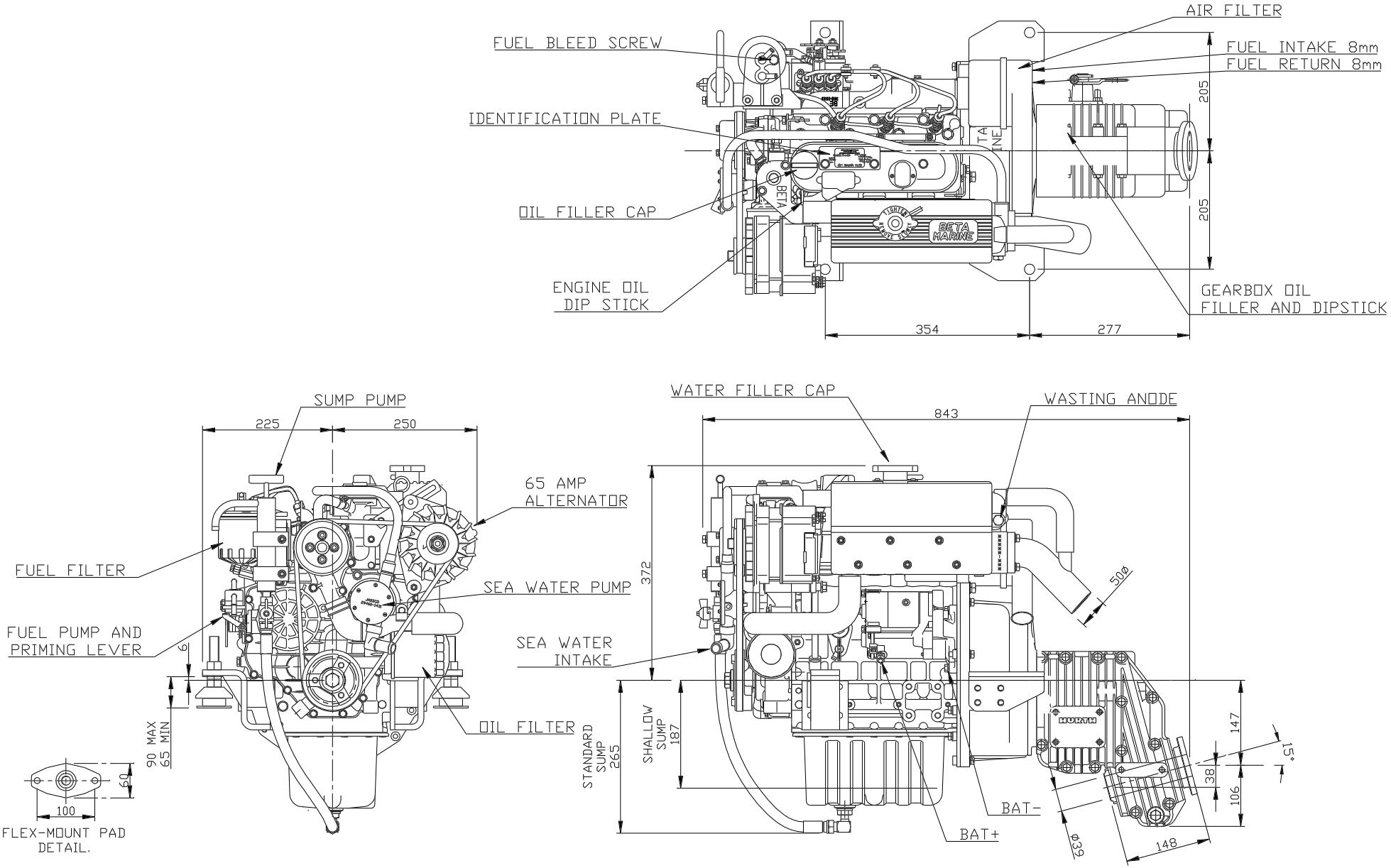

REV	DESCRIPTION	DATE	APP'D	DRAWN
01				

NOTES

DIMENSIONS IN MM (INCH)
DO NOT SCALE

TITLE

BD1005 HEAT EXCHANGER
WITH A HBW 150V GEARBOX
AND 65 AMP ALTERNATOR

BETA MARINE

BETA MARINE LTD,
MERRETTS MILLS,
BATH ROAD,
SOUTH WOODCHESTER,
STROUD, GLOS. GL5 5EU

TEL: (01453) 835282 FAX: (01453) 835284

DRAWN BY:–	SIZE	DWG NO.	REV
TW	A4	100-05948	
CHECKED BY:– LT	SCALE NTS	PAGE 1 of 1	DATE 3/11/98